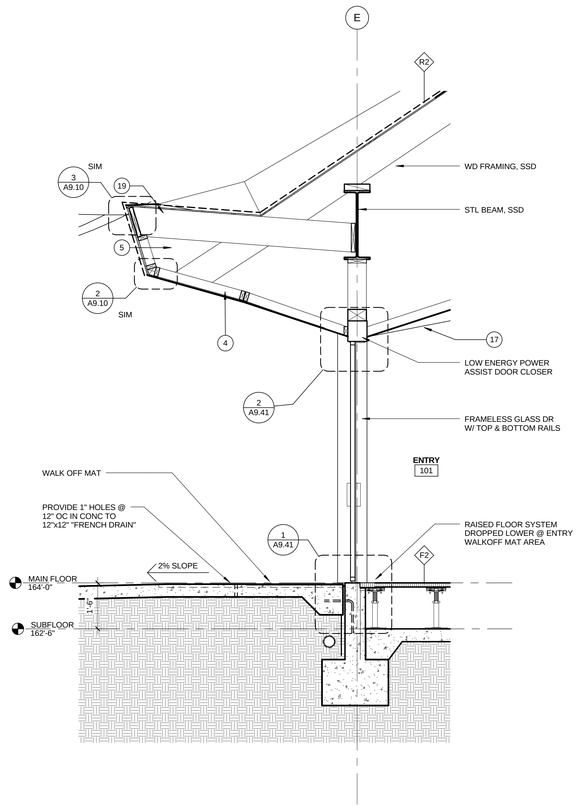

WALL SECTION @ ENTRY

0 6" 1' 2' | 1/2" = 1'-0" | 3

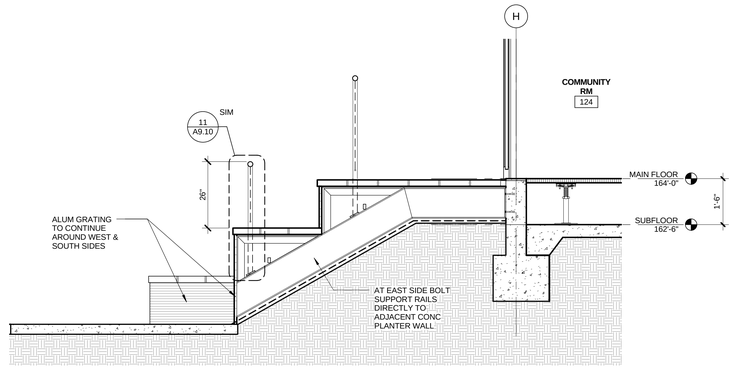

SECTION @ ACCESSIBLE WHEEL CHAIR SEATING SPACE

0 6" 1' 2' | 1/2" = 1'-0" | 4

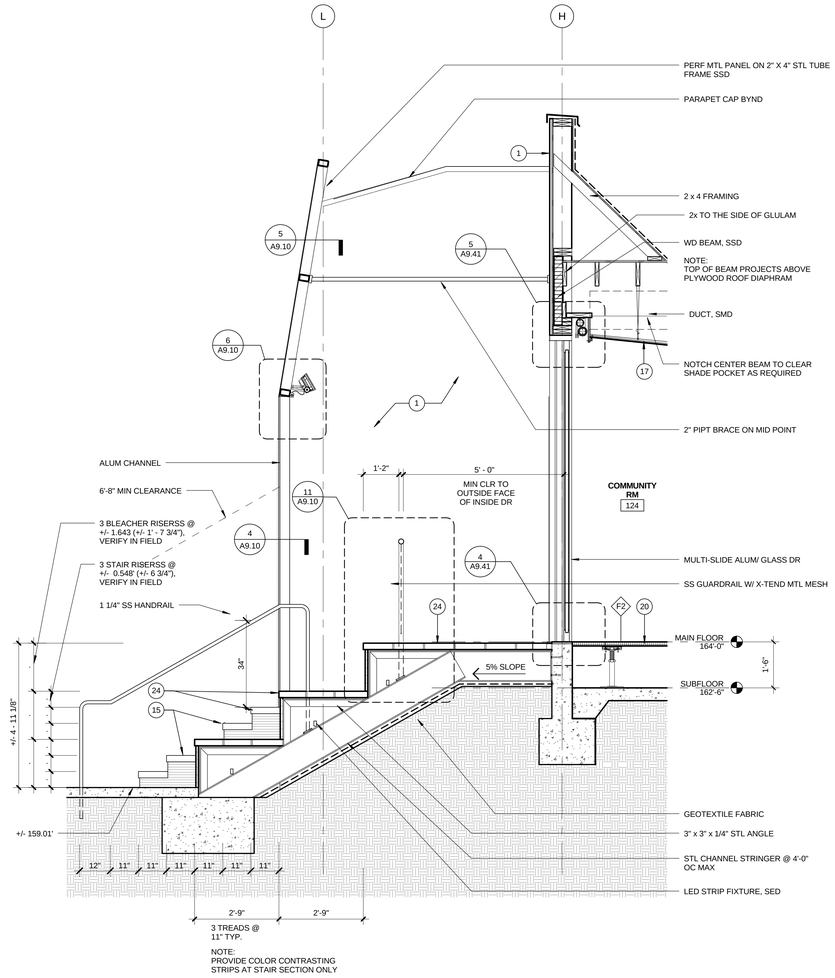

WALL SECTION @ SOUTH COMMUNITY RM

0 6" 1' 2' | 1/2" = 1'-0" | 2

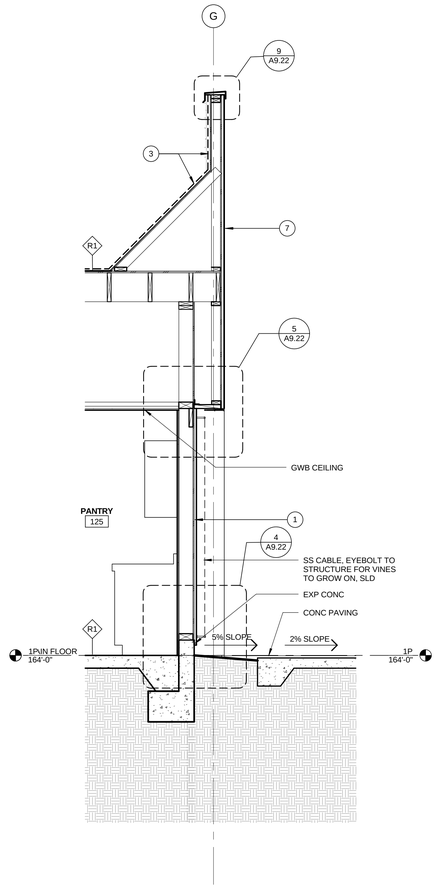

WALL SECTION @ NORTH COMMUNITY RM

0 6" 1' 2' | 1/2" = 1'-0" | 1

STAIR NOTES: APPLIES TO ALL STAIRS

52. a) MINIMUM 11" RUN & MAXIMUM 7" RISE. THE LARGEST RISE OR RUN IN A FLIGHT OF STAIRS MAY NOT EXCEED THE SMALLEST BY MORE THAN 3/8" [1009.4.4]
b) MINIMUM OF 6'-8" HEADROOM CLEARANCE AT TREAD NOSING [1009.2]
c) MINIMUM OF STAIRWAY WIDTH DIMENSION FOR LANDING AT THE TOP AND BOTTOM OF EACH STAIRWAY [1009.5]
d) HANDRAILS FOR THE LENGTH OF THE STAIRS. THE TOP OF THE HANDRAIL SHALL BE PLACED NOT LESS THAN 34" NOR MORE THAN 38" ABOVE TREAD NOSING [1012.2]
e) MINIMUM OF 44" CLEAR WIDTH [1009.1]
f) HANDRAILS WITH A CIRCULAR CROSS-SECTION SHALL HAVE AN OUTSIDE DIAMETER OF AT LEAST 1.25 INCHES AND NOT GREATER THAN 2 INCHES OR SHALL PROVIDE EQUIVALENT GRASPABILITY. IF THE HANDRAIL IS NOT CIRCULAR, IT SHALL HAVE A PERIMETER DIMENSION OF AT LEAST 4 INCHES AND NOT GREATER THAN 6.25 INCHES WITH A MAXIMUM CROSS-SECTION DIMENSION OF 2.25 INCHES. EDGES SHALL HAVE A MINIMUM RADIUS OF 0.01 INCH. [1012.3]
g) HANDRAILS SHALL EXTEND HORIZONTALLY AT LEAST 12" BEYOND THE TOP RISER AND 12 INCHES PLUS THE TREAD WIDTH BEYOND THE NOSING AT THE BOTTOM. HANDRAILS SHALL RETURN TO A WALL, GUARD OR THE WALKING SURFACE. [1012.6 CBC]
h) GUARD(S)

MATERIAL KEYNOTES

1. SMOOTH STL TROWELLED CEMENT PLASTER, PAINTED WHITE W/ ANTI GRAFFITI COATING
2. GALV STL TRELLIS WITH GALVD STL TUBE SECTIONS ABV, SSD
3. THERMOPLASTIC MEMBRANE ROOFING, LIGHT GRAY OR WHITE, SEE ROOF PLAN
4. SMOOTH STL TROWELLED CEMENT PLASTER SOFFIT TYP, PTD
5. THERMOPLASTIC MEMBRANE FASCIA TO MATCH ROOFING
6. EXTRUDED ALUMINUM GLAZING SYSTEM WITH LOW REFLECTIVITY GLASS, CLEAR ANONDIZED FINISH
7. DIMPLED MTL PANEL FROM CUSTOM DIE W/ KYNAR FACTORY FINISH, PATTERN TBD
8. BUTT-JOINT INSULATED GLASS IN ALUM FRAME, CLR ANNOD
9. METAL MESH GUARDRAIL
10. CUSTOM COLORED FIRE RETARDENT FABRIC CANOPY SUSP ON SS AIRCRAFT CABLE. FABRIC TO BE APPROVED BY FIRE DEPT
11. SOLAR PANELS WITH TRANSPARENT BACKSHEET ON GALV STL TRELLIS
12. PERF MTL PANEL W/ KYNAR FINISH, CUSTOM PATTERN TBD
13. NOT USED
14. NOT USED
15. ALUM GRATING
16. PTD SMOOTH STL TROWELLED CEMENT PLASTER TO MATCH (E) THELMA TERRY
17. SUSPENDED ACOUSTIC PLASTER SYSTEM
18. RECESSED LIGHT FIXTURE
19. SS EYE NUT TO CANOPY SUPPORT
20. RAISED ACCESS FLOOR OVER SLAB ON GRADE, SEE FINISH PLAN FOR FINISH INFO
21. BOARD FORMED CONCRETE WALL
22. HORIZONTAL BUTT JOINT
23. EXT GLASS SYSTEM IN CUSTOM STL FRAME, PTD
24. PRE-CAST CONC PLANKS

PICO BRANCH LIBRARY

2201 Pico Blvd.
Santa Monica, CA 90404

PROJECT

KoningEizenbergArchitecture
1454 25th St, Santa Monica, CA 90404

310.828.6131 info@kearch.com
310.828.0719 fax www.kearch.com

ARCHITECT'S PROJECT NO.
1001

ARCHITECT

All designs, ideas, arrangements and plans indicated by these drawings are the property and copyright of the Architect and shall neither be used on any other work nor be disclosed to any other person for any use whatsoever without written permission.

Koning Eizenberg Architecture and/or its principals and employees waives any and all liability or responsibility for problems that may occur when these plans, drawings, specifications, and/or designs are followed without the professional's guidance with ambiguities, or conflicts which are alleged.

CONSULTANT

City of Santa Monica Architecture Services
1437 4TH STREET, SUITE 300
SANTA MONICA, CA 90401
TEL. (310) 458-2205
FAX. (310) 399-1541
architecture@smgov.net

DATE : 20
SUBMITTED BY :

DATE : 20
APPROVED BY :
Miriam Mulder,
Architecture Services Manager

CITY OF SANTA MONICA
DEPARTMENT OF PUBLIC WORKS

REVIEWED BY : DATE : 20

REVIEWED BY : DATE : 20

REVIEWED BY : DATE : 20

CITY CLIENT

NO.	DATE	BY	DESCRIPTION
3	05/07/12		PLAN CHECK 1
1	02/21/12		ADDENDUM 2

REVISIONS

ISSUE

PLAN CHECK CORRECTIONS

DATE
05/07/2012

DRAWING NO. **6693**

SHEET TITLE
WALL SECTIONS

SHEET NO.
A5.20

SHEET OF

DWG. NO. -

TITLE OF PROJECT