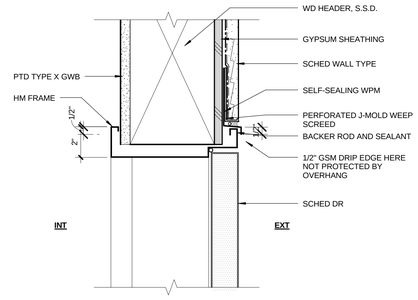

NOTE:
- JAMB SIM.
- STL. STUD CONST. SIM.

EXT HM DR HEAD @ STUCCO | 0 1" 2" 4" | 3" = 1'-0" | 10

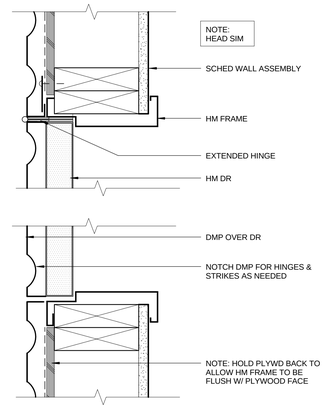

DR 132 JAMB | 0 1" 2" 4" | 3" = 1'-0" | 7

MATERIAL ABBREVIATIONS

AGC	ALUMINUM GLAZING CHANNEL
APC	ACOUSTICAL PLASTER CEILING
DF	DRAINAGE FABRIC
DMP	DIMPLED MTL PANEL
FI	FIBERGLASS INSULATION
HW	HARD WOOD
IGU	INSULATED GLASS UNIT
NSB	NEOPRENE SETTING BLOCK
PB	PROTECTION BOARD
PCP	PRE-CAST CONCRETE PLANKS
RAF	RAISED ACCESS FLOOR SYSTEM
RD	ROOF DRAIN
RPU	ROOFING PLYWOOD UNDERLAY
SAWM	SELF ADHERED WATERPROOFING MEMBRANE
SCP	SMOOTH STEEL TROWLED CEMENT PLASTER
SOG	SLAB ON GRADE
SS	STAINLESS STEEL
TRM	THERMOPLASTIC ROOFING MATERIAL
VB	VAPOR BARRIER
WOM	WALLK OFF MAT
WP	WATERPROOFING

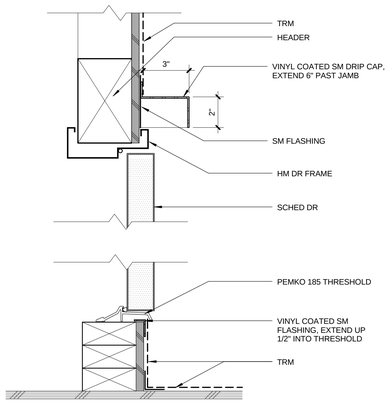

R1 - HEAD & SILL | 0 1" 2" 4" | 3" = 1'-0" | 13

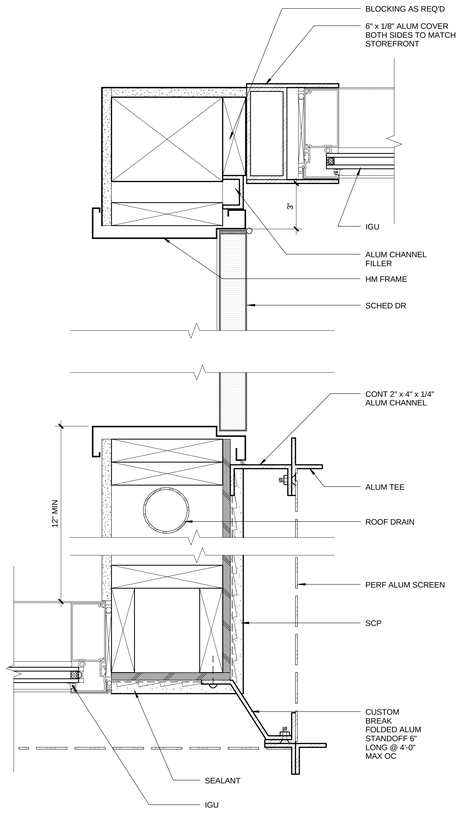

DR 103 JAMB | 0 1" 2" 4" | 3" = 1'-0" | 9

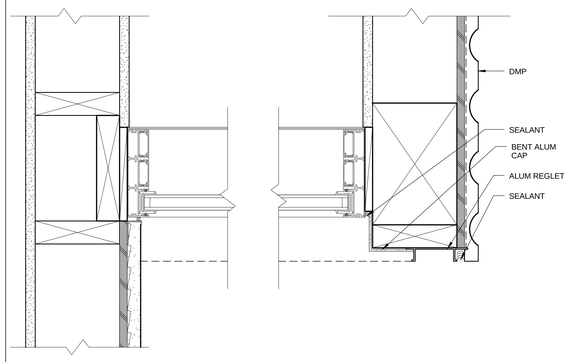

FLEETWOOD DOOR JAMB | 0 1" 2" 4" | 3" = 1'-0" | 6

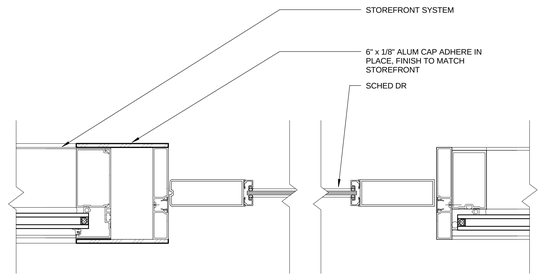

ENTRY DOOR JAMB | 0 1" 2" 4" | 3" = 1'-0" | 3

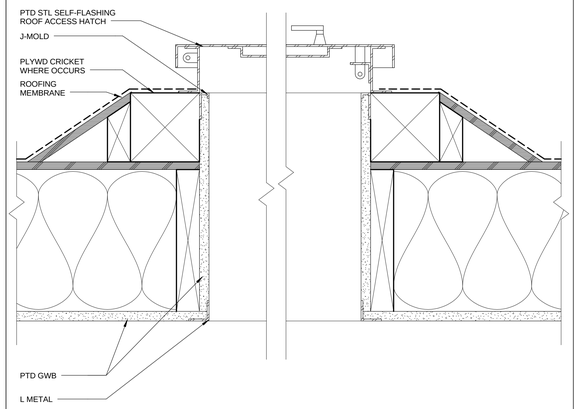

ROOF ACCESS HATCH | 0 1" 2" 4" | 3" = 1'-0" | 12

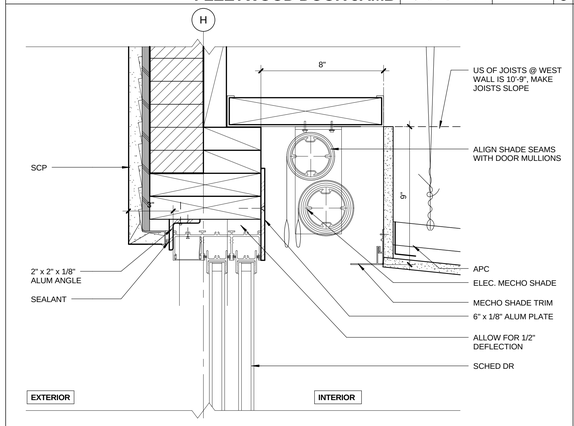

FLEETWOOD DOOR HEAD | 0 1" 2" 4" | 3" = 1'-0" | 5

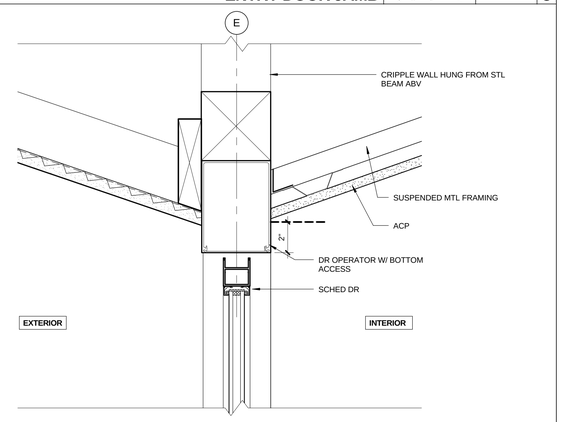

ENTRY DOOR HEAD | 0 1" 2" 4" | 3" = 1'-0" | 2

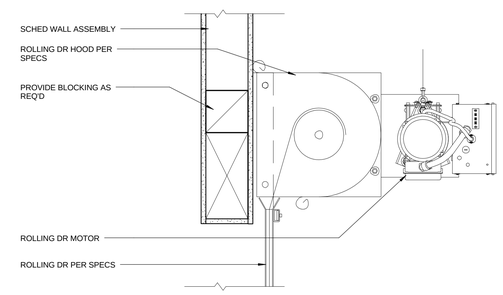

OVERHEAD DR 102 HEAD | 0 2" 4" 6" 8" | 1 1/2" = 1'-0" | 11

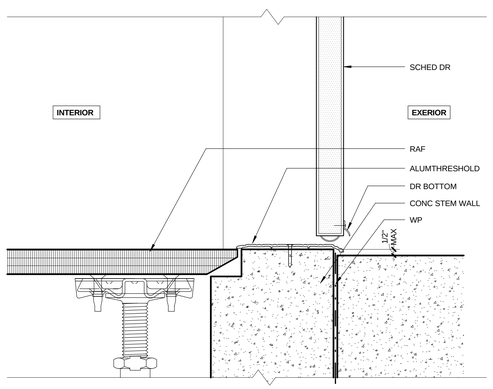

DR 103 SILL | 0 1" 2" 4" | 3" = 1'-0" | 8

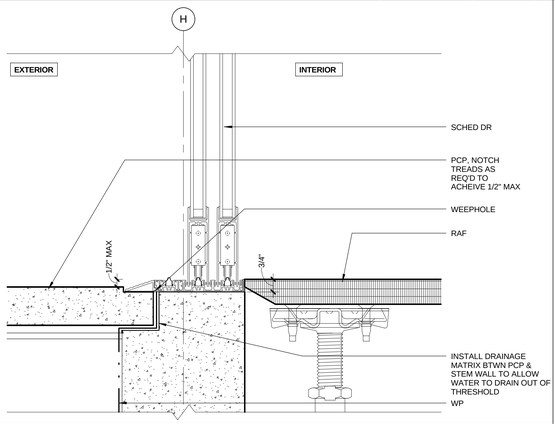

FLEETWOOD DOOR SILL | 0 1" 2" 4" | 3" = 1'-0" | 4

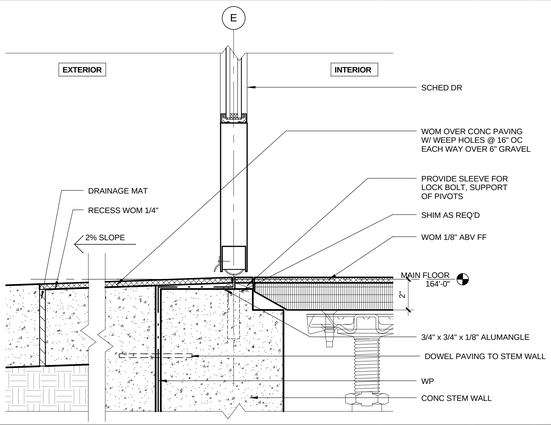

ENTRY DOOR SILL | 0 1" 2" 4" | 3" = 1'-0" | 1

PICO BRANCH LIBRARY

2201 Pico Blvd.
Santa Monica, CA 90404

PROJECT

KoningEizenbergArchitecture
1454 25th St, Santa Monica, CA 90404

310.828.6131 info@kearch.com
310.828.0719 fax www.kearch.com

ARCHITECT'S PROJECT NO.
1001

ARCHITECT

All designs, ideas, arrangements and plans indicated by these drawings are the property and copyright of the Architect and shall neither be used on any other work nor be disclosed to any other person for any use whatsoever without written permission.

Koning Eizenberg Architecture and/or its principals and employees waives any and all liability or responsibility for problems that may occur when these plans, drawings, specifications, and/or designs are followed without the professional's guidance with ambiguities, or conflicts which are alleged.

CONSULTANT

City of Santa Monica
Architecture Services

1437 4TH STREET, SUITE 300
SANTA MONICA, CA 90401
TEL. (310) 458-2205
FAX. (310) 399-1541
architecture@smgov.net

SUBMITTED BY : DATE : 20

APPROVED BY : DATE : 20
Miriam Mulder,
Architecture Services Manager

CITY OF SANTA MONICA
DEPARTMENT OF PUBLIC WORKS

REVIEWED BY : DATE : 20

REVIEWED BY : DATE : 20

REVIEWED BY : DATE : 20

CITY CLIENT

NO.	DATE	BY	DESCRIPTION
3	05/07/12		PLAN CHECK 1
1	02/21/12		ADDENDUM 2

REVISIONS

ISSUE

PLAN CHECK CORRECTIONS

DATE
05/07/2012

DRAWING NO. **6693**

SHEET TITLE
DOOR DETAILS

SHEET NO.
A9.41

SHEET OF

DWG. NO. -

TITLE OF PROJECT: