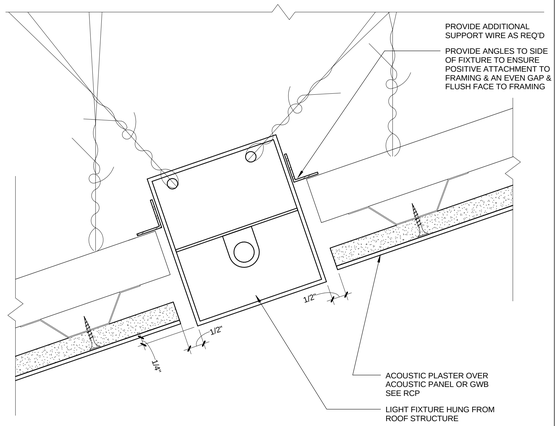

LIGHT IN CEILING - STRAIGHT | 0 1/2" 1" 2" | 6" = 1'-0" | **16**

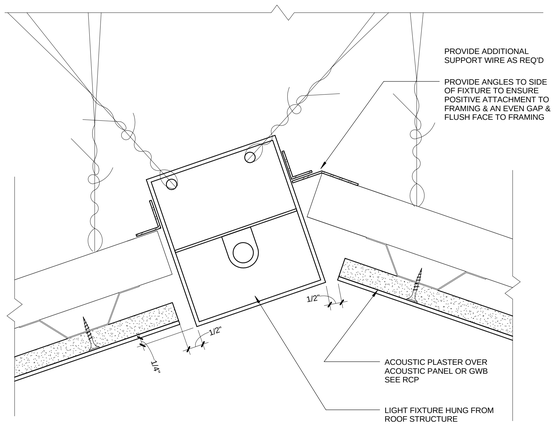

LIGHT IN CEILING - VALLEY | 0 1/2" 1" 2" | 6" = 1'-0" | **12**

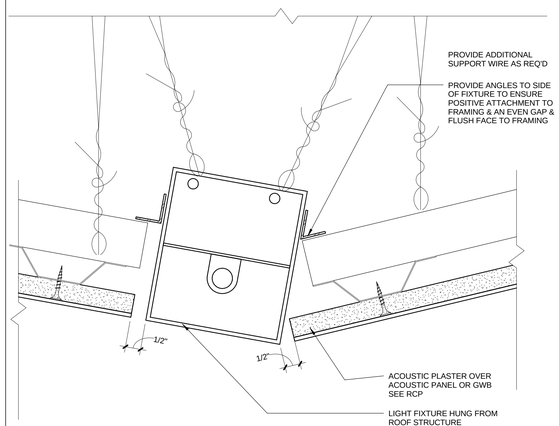

LIGHT IN CEILING - FOLD | 0 1/2" 1" 2" | 6" = 1'-0" | **8**

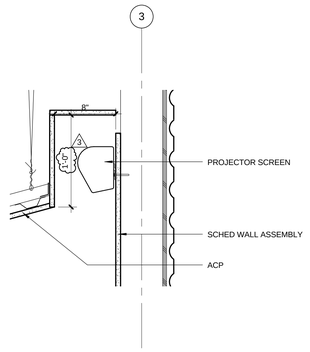

PROJECTOR SCREEN | 0 2" 4" 6" 8" | 1 1/2" = 1'-0" | **4**

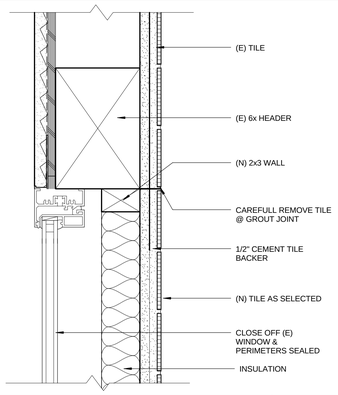

INFILL @ TT RESTROOM WNDWS | 0 1" 2" 4" | 3" = 1'-0" | **11**

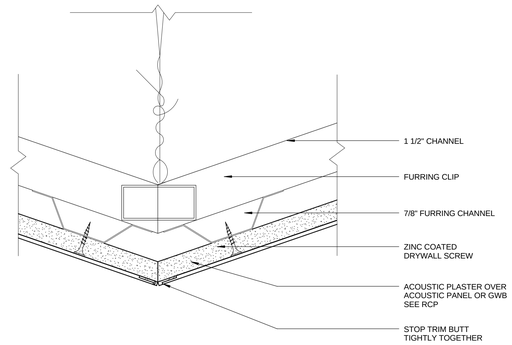

ACOUSTIC PLASTER RIDGE FOLD | 0 1/2" 1" 2" | 6" = 1'-0" | **7**

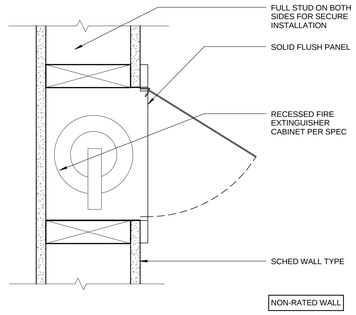

RECESSED FE CABINET | 0 1" 2" 4" | 3" = 1'-0" | **3**

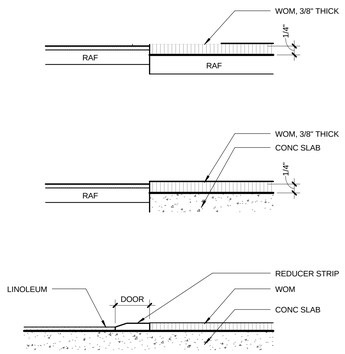

WALK OFF MAT TO FLOOR | 0 1/2" 1" 2" | 6" = 1'-0" | **10**

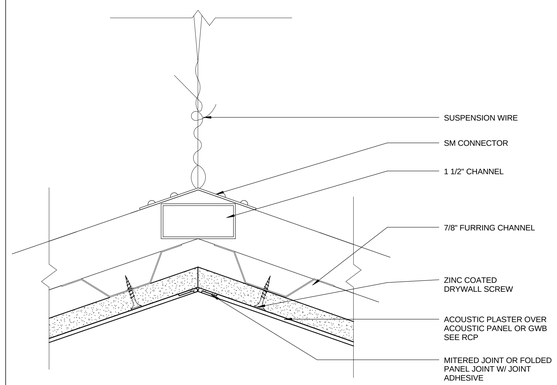

ACOUSTIC PLASTER VALLEY FOLD | 0 1/2" 1" 2" | 6" = 1'-0" | **6**

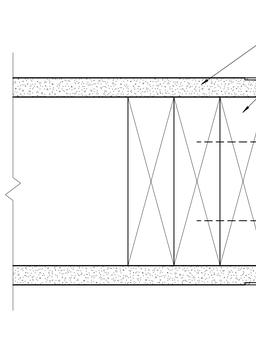

STEEL PLATE WALL PROTECTION | 0 1/2" 1" 2" | 6" = 1'-0" | **2**

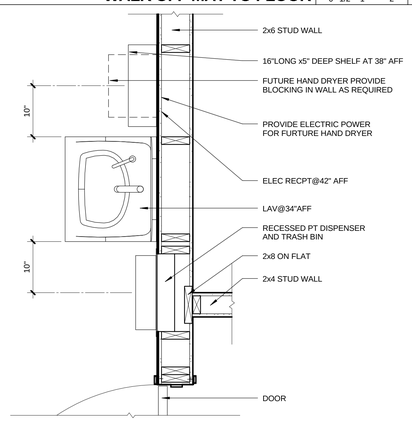

PLAN DETAIL MO BATHROOM LAV | 0 3" 6" 1' | 1" = 1'-0" | **9**

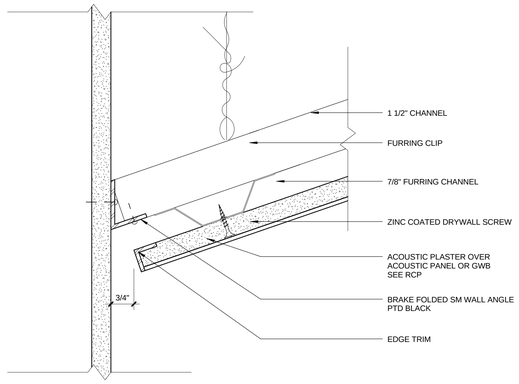

ACOUSTIC PLASTER CEILING TO WALL | 0 1/2" 1" 2" | 6" = 1'-0" | **5**

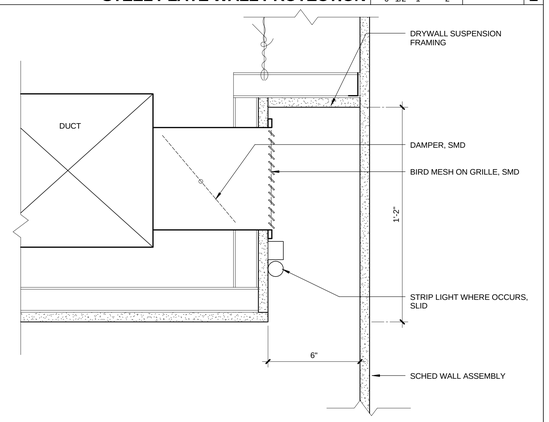

LIGHT/ RETURN AIR RECESS | 0 1" 2" 4" | 3" = 1'-0" | **1**

SHEET OF

DWG. NO. -

TITLE OF PROJECT :

PICO BRANCH LIBRARY

2201 Pico Blvd.
Santa Monica, CA 90404

PROJECT

KoningEizenbergArchitecture
1454 25th St, Santa Monica, CA 90404

310.828.6131 info@kearch.com
310.828.0719 fax www.kearch.com

ARCHITECT'S PROJECT NO.
1001

ARCHITECT

All designs, ideas, arrangements and plans indicated by these drawings are the property and copyright of the Architect and shall neither be used on any other work nor be disclosed to any other person for any use whatsoever without written permission.

Koning Eizenberg Architecture and/or its principals and employees waives any and all liability or responsibility for problems that may occur when these plans, drawings, specifications, and/or designs are followed without the professional's guidance with ambiguities, or conflicts which are alleged.

CONSULTANT

City of Santa Monica
Architecture Services

1437 4TH STREET, SUITE 300
SANTA MONICA, CA 90401
TEL. (310) 458-2205
FAX. (310) 399-1541
architecture@smgov.net

SUBMITTED BY : DATE : 20

APPROVED BY : Miriam Mulder, Architecture Services Manager DATE : 20

CITY OF SANTA MONICA
DEPARTMENT OF PUBLIC WORKS

REVIEWED BY : DATE : 20

REVIEWED BY : DATE : 20

REVIEWED BY : DATE : 20

CITY CLIENT

NO.	DATE	BY	DESCRIPTION
3	05/07/12		PLAN CHECK 1
1	02/21/12		ADDENDUM 2

REVISIONS

ISSUE

PLAN CHECK CORRECTIONS

DATE
05/07/2012

DRAWING NO. **6693**

SHEET TITLE
INTERIOR DETAILS

SHEET NO.
A9.90